TELECOM INFRA PROJECT

OpenWiFi

Built in India for the World OpenWiFi

Together We Build, Test and Deploy

Copyright © 2021 Telecom Infra Project, Inc.

Open WIFI Introduction

Typical Wi-Fi Solution

✗ Proprietary APIs

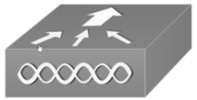

✗ Closed Implementation

✗ Proprietary interface

✗ Vendor HW Only

✓ **Standard Air Interface**

Certified by Wi-Fi Alliance

Open Wi-Fi Community

✓ **Open APIs**

Integrate once, works cross vendors

✓ **Open-source core, Choice of Controllers**

Contribute, secure, examine

✓ **Interoperable “Open interface”**

✓ **Choice of HW – multiple vendors/Models**

✓ **Standard Air Interface**

Certified by Wi-Fi Alliance

Copyright © 2021 Telecom Infra Project, Inc.

Vibrant & Diverse **Global** Community - 100+ companies

Service Providers

Shaw · Deutsche Telekom · MTN · vodacom · Globe · LIBERTY LATIN AMERICA

MSPs

boingo wireless · join™ · iBrowse European Networks made Simple

ODMs

Edge-corE NETWORKS · CIG · tp-link · SERCOMM · WALLYS Wallys (Suzhou) Communications Co., LTD · io

Cloud controllers

NetExperience · Plume · LINDSAY BROADBAND · inventum inventive continuum · io · plumeria networks™ · tanaza · INDIO NETWORKS · ADTRAN · celona

ISVs

American Bandwidth · Candela TECHNOLOGIES · BENU NETWORKS · purple · minim · SAM SEAMLESS NETWORK · kloudspot

Systems

GLOBAL EDGE Intelligence Of Things ALTRAN GROUP · ALTRAN · Tech Mahindra

Merchants

QUALCOMM® · MAXLINEAR · MEDIATEK · intel · Celeno™

ITAs

Wireless Broadband Alliance · ITRI Industrial Technology Research Institute · CableLabs®

Copyright © 2021 Telecom Infra Project, Inc.

Open Wi-Fi Deployments in India

How does TIP Open Wifi help ?

- **Provide affordable cost wi-fi**
- **Strengthen Built in India ecosystem**
- **Reduced R&D costs**

PM WANI DEPLOYMENTS SNAPSHOT USING TIP OPEN WIFI

Public Wi-Fi deployment by HFCL – Village Baslambi, Haryana

From 2 GB/day data usage in initial few weeks to >250 GB/day in a matter of 2 months, over 2000 unique users connect to this network every day

- People use Internet for Entertainment, Online school, Tele-medicine, E-commerce & digital payments, Government utilities

Public Wi-Fi deployment by HFCL – Village Baidabettu, Udupi

Covering about 6 sq km of sparsely populated village, weatherproof outdoor APs provide 24x7 connectivity in this heavy rainfall region to over 9000 residents

- Proved to be a boon for teachers and students who had no access to Internet to conduct and attend online school during pandemic

- D-Vois Launched deployments for 500 restaurants/malls with a split between ***Indio Networks and HFCL*** Open Wi-Fi Aps.

- Launched joint awareness campaign at the venues

How does TIP Open Wi-Fi help ?

- ***Interoperability/Vendor lock-in***

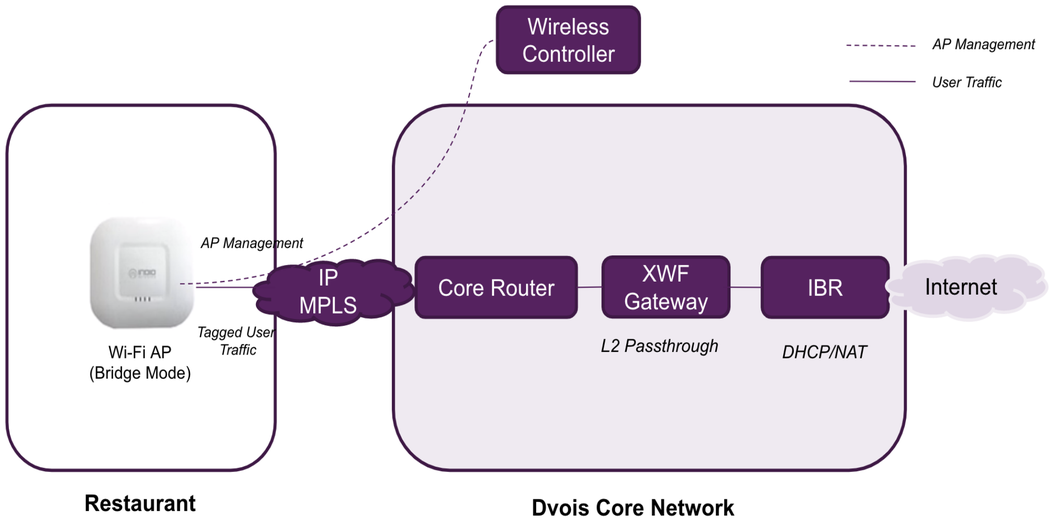

© 2021 Telecom Infra Project, Inc

Copyright © 2021 Telecom Infra Project, Inc.